DELPHI DP200

REMOVAL - INSTALLATION

TIMING PROCEDURE

Engine timing 17

DIAMOND DIESEL AND TURBOCHARGER SERVICE

2550 E 12th Street Oakland, CA 94601
2785 A Del Monte St, West Sacramento, CA 95691
840 Marietta Way, Sparks, NV 89431

FINDING TOP DEAD CENTER

17A ENGINE TIMING

General description

To reach the accurate fuel injection needed for engines to conform to emissions legislation, the latest fuel injection pumps operate at a static timing very close to TDC.

The timing gears are stamped with timing marks to ensure that they are assembled correctly (A). The marked teeth of the crankshaft, the camshaft and the fuel pump gears will be in mesh with the idler gear when number 1 piston is close to top dead centre (TDC) on the compression stroke. The marked teeth of the idler gear may not necessarily be in mesh in this position, because of the different speeds at which the gears rotate.

The fuel injection pump is timed at TDC on the compression stroke of number 1 cylinder. It is important that fuel injection timing is accurate to conform to emissions legislation. Always use operations, 17A-01A or B to obtain TDC on the compression stroke of number 1 cylinder accurately.

Caution: *The fuel injection pump has a lock screw (B1) which locks the shaft.* ***It is important that the lock screw is released*** *and the pump shaft is free to turn. The drive shaft of the pump must not be rotated without the spacer (B2) in position under the locking screw. If the drive shaft is rotated with the locking screw tightened on to the shaft, the drive shaft will be damaged.*

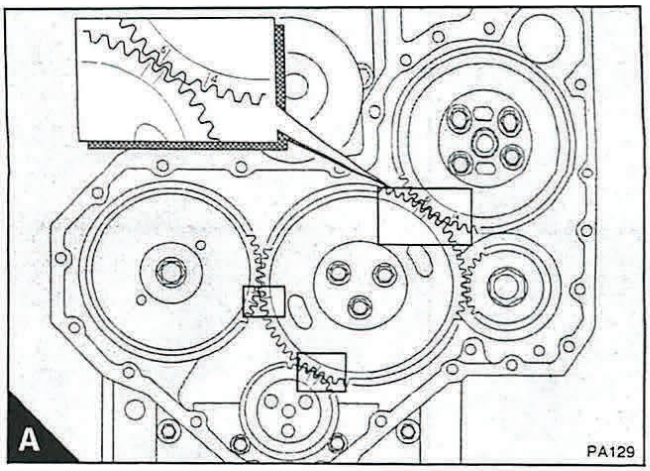

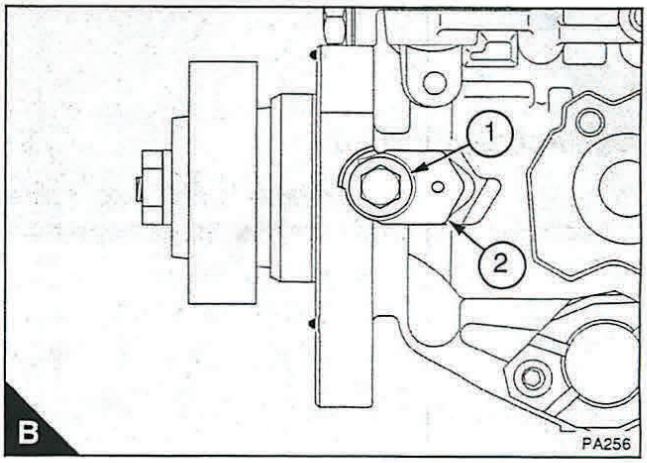

continued

1-800-434-3735

The latest fuel injection pumps have a hub (A2) which is ***mounted permanently*** onto the drive shaft.

The manufacturer fits the hub to the pump to ensure very accurate timing. Engines that have this arrangement have the drive gear fastened to the hub instead of to the shaft of the pump. A pin (A1) is used to accurately time these pumps in service.

Caution: *Do not release the nut* (A3) *from the fuel injection pump. Illustration (B) shows the nut (B2) in position when the fuel pump is fitted to the engine. The fuel pump hub is fitted to the shaft in the factory to ensure that the fuel pump is in the correct position for timing. If the nut is removed and the hub moves, the hub will need to be accurately fitted to the pump by use of specialist equipment before the pump can be fitted to the engine.*

The fuel pump gear is fastened to the hub of the fuel pump by four setscrews. The setscrews pass through slots in the gear which allow removal of the backlash.

Note: On the latest engines with belt driven coolant pumps, four tamper proof fasteners retain the fuel pump gear. Special tools are needed to remove these fasteners, refer to your Perkins distributor.

To remove the fuel injection pump from the engine it is only necessary to remove the four setscrews (B1) which secure the fuel pump gear to the hub, see operation 20A-06.

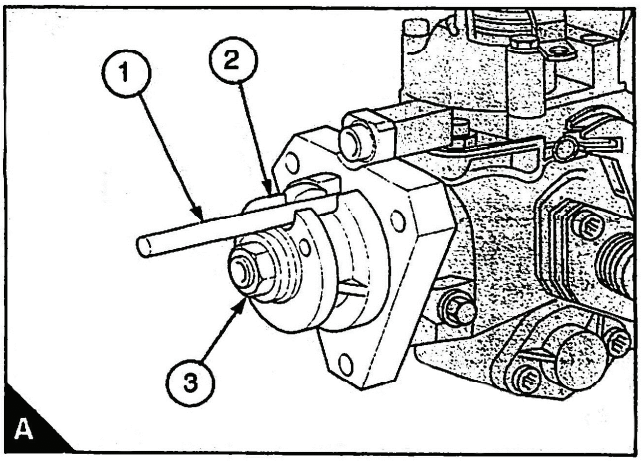

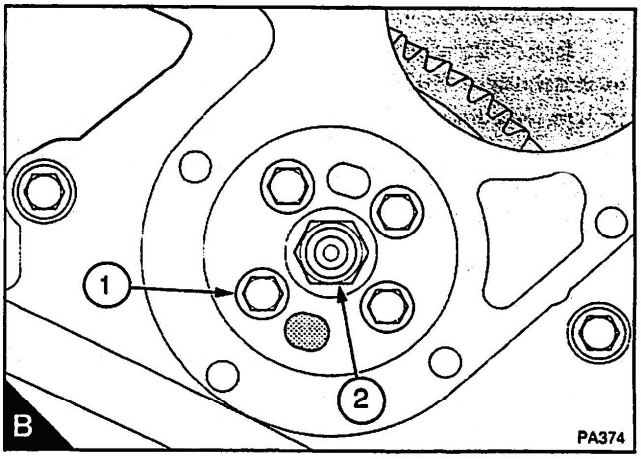

DIAMOND DIESEL AND TURBOCHARGER SERVICE

2550 E 12th Street Oakland, CA 94601
2785 A Del Monte St, West Sacramento, CA 95691
840 Marietta Way, Sparks, NV 89431

1-800-434-3735

17A ENGINE TIMING

Engine timing

To set number 1 piston to TDC on the compression stroke **17A-01A**

Special tools:

Valve spring compressor, PD.6118B

Stud adaptor for use with PD.6118B, PD.6118B-7

Setscrew adaptor for use with PD.6118B, PD.6118B-8

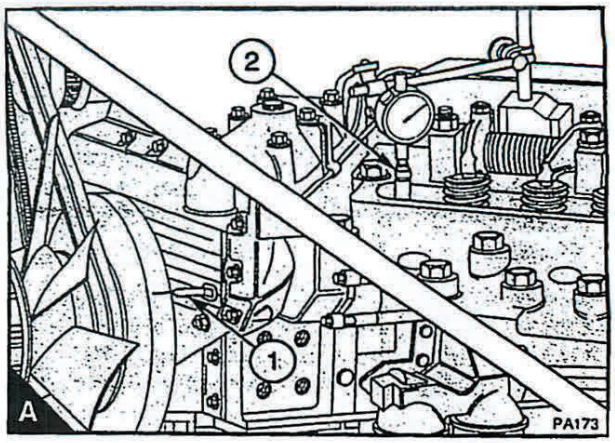

1 Fasten a temporary pointer to the timing case cover with its tip near to the outer edge of the crankshaft pulley or damper (A1).

2 Loosen the gland nuts that retain the atomisers, see operation 20A-02.

3 Remove the rocker cover, operation 12A-01.

4 Rotate the crankshaft, clockwise from the front, until the push rod for the inlet valve of the rear cylinder just tightens.

5 Remove the spring clip and the spacer from the front of the rocker shaft. Release the fasteners of the front two pedestals of the rocker shaft and remove the front rocker lever; tighten the fasteners of the rocker shaft pedestals.

6 Remove the valve springs from the front valve with the valve spring compressor PD.6118B and the adaptor PD.6118-7, for pedestal studs, or the adaptor PD.6118-8, for pedestal setscrews.

Caution: *Fit a suitable collar near the top of the valve to hold the valve if the crankshaft is rotated too far.*

7 Allow the valve to be held by the top of the piston.

8 Fasten a dial test indicator with its plunger in contact with the top of the valve stem (A2) and with a reading shown on the gauge. Rotate slowly the crankshaft, clockwise from the front, until the clockwise movement of the dial gauge pointer just stops. Make a suitable mark on the crankshaft pulley or damper to align with the temporary pointer. Continue to rotate the crankshaft, in the same direction, until the gauge pointer just begins to move in a counter-clockwise direction. Make another mark on the pulley or damper to align with the pointer. Mark the centre point between the two marks on the pulley or damper and remove the other two marks.

9 Rotate the crankshaft approximately 45° counter-clockwise from the front and then clockwise until the mark on the pulley or damper is aligned with the pointer. Number 1 piston is now at TDC on the compression stroke.

Another method to set number 1 piston to TDC on the compression stroke **17A-01B**

1 Fasten a temporary pointer to the timing case cover (or other suitable position) with its tip near to the outer edge of the crankshaft damper or pulley.

2 Loosen the gland nuts that retain the atomisers, see operation 20A-02.

3 Remove the rocker cover.

4 Rotate the crankshaft clockwise, from the front, until the push rod for the inlet valve of the rear cylinder just tightens.

5 Rotate the crankshaft a further 1/8 of a turn clockwise. Insert a suitable lever between the rocker lever and the valve spring cap of number 1 inlet valve. Open the inlet valve and put a spacer approximately 5,0 mm (0.2 in) thick between the valve tip and the rocker lever.

6 Slowly rotate the crankshaft counter-clockwise until the piston makes contact with the open valve. Make a temporary mark on the damper or pulley to align accurately with the tip of the pointer.

7 Rotate the crankshaft clockwise one or two degrees and remove the spacer between the valve and the rocker lever. Rotate the crankshaft 1/4 of a turn counter-clockwise. Put the spacer between the valve tip and the rocker lever.

8 Slowly rotate the crankshaft clockwise until the piston makes contact with the open valve. Make another temporary mark on the damper or pulley to align accurately with the tip of the pointer.

9 Make a temporary mark at the centre point between the two marks on the damper or pulley and remove the other two marks. Rotate the crankshaft counter-clockwise 1/8 of a rotate and remove the spacer between the valve and the rocker lever. Slowly rotate the crankshaft clockwise until the mark on the damper or pulley aligns accurately with the tip of the pointer. Number 1 piston is now at TDC on the compression stroke.

To check the valve timing **17A-02**

1 Set the piston of number 1 cylinder to TDC on the compression stroke, operation 17A-01A.

2 Remove the dial test indicator from number 1 inlet valve and fit the valve springs and the rocker lever. Ensure that the fasteners for the rocker shaft pedestals are to the correct torque.

3 Rotate the crankshaft, clockwise from the front, until the inlet valve of the rear cylinder is fully open.

4 Set the valve tip clearance of number 1 cylinder inlet valve to 1,5 mm (0.059 in).

5 Rotate the crankshaft, clockwise from the front, until the push rod of number 1 cylinder inlet valve just tightens. In this position, check if the mark on the crankshaft pulley or damper is within +/- 2 1/2° of the temporary pointer. Use the formula below to find the measurement which is equal to 2 1/2° on the pulley or damper.

$$\frac{C \times P}{360}$$

C = circumference of pulley or damper

P = 2.5 degrees

6 If the timing is more than 2 1/2° out of position, the timing gears are probablely not in correct mesh.

Note: One tooth on the camshaft gear is equivalent to 23 mm (0.9 in) at the circumference of a pulley of 203 mm (8 in) diameter. If a large damper is fitted, one tooth on the camshaft gear is equivalent to 35 mm (1.4 in) at the circumference of a damper of 310 mm (12.2 in) diameter, or 37 mm (1.5 in) at the circumference of a damper of 327 mm (12.8 in) diameter.

7 Rotate the crankshaft, clockwise from the front, until the inlet valve of the rear cylinder is fully open. Set the valve tip clearance of the inlet valve of number 1 cylinder to 0,20 mm (0.008 in).

8 Fit the rocker cover, operation 12A-01.

9 Remove the temporary pointer from the timing case and the timing mark from the pulley or damper.

17A ENGINE TIMING

To check the timing of the fuel injection pump — 17A-03

Special tools:

Timing pin PD.245, Bosch fuel injection pumps

Timing pin PD.246, Lucas and Stanadyne fuel injection pumps

Caution: *Do not remove the nut (A2) which retains the hub (A4) to the shaft of the fuel injection pump. The hub is fitted permanently to the shaft. If the hub is moved, it will be necessary for a fuel injection pump specialist to correctly position the hub on the shaft with special test equipment available to Perkins distributors.*

1 Set the piston of number 1 cylinder to TDC on the compression stroke, operation 17A-01A or B.

2 Remove the gear cover from the cover of the timing case. For gear driven coolant pumps: Remove the coolant pump, operation 21A-02A.

Note: On the latest engines with belt driven coolant pumps, four tamper proof fasteners retain the fuel pump gear. Special tools and personnel with the correct training are necessary to remove these fasteners, refer to your nearest Perkins distributor.

3 Insert the timing pin (A1) through the hole (A5) in the fuel pump gear and the slot of the hub (A4). Push the pin fully into the hole (A3) in the body of the fuel pump. If the pin can be fully inserted then the pump timing is correct. There should be no resistance when the pin is inserted.

Note: The position for the timing pin for Lucas and Stanadyne fuel injection pumps is (A1). The position for the timing pin for Bosch EPVE fuel injection pumps is (B1).

4 Remove the timing pin.

5 If the timing pin cannot be pushed into the pump body, check that the engine is correctly set at TDC on the number 1 cylinder compression stroke, operation 17A-01A or B.

If the engine is set correctly at TDC on the number 1 cylinder compression stroke, but the pin does not fit into the hole, the fuel pump must be removed and set by a specialist.

6 Fit the gear cover to the cover of the timing case. For gear driven coolant pumps: Fit the coolant pump, operation 21A-02A.

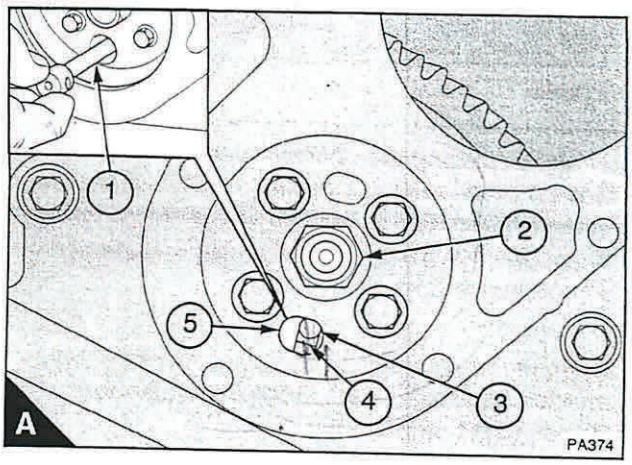

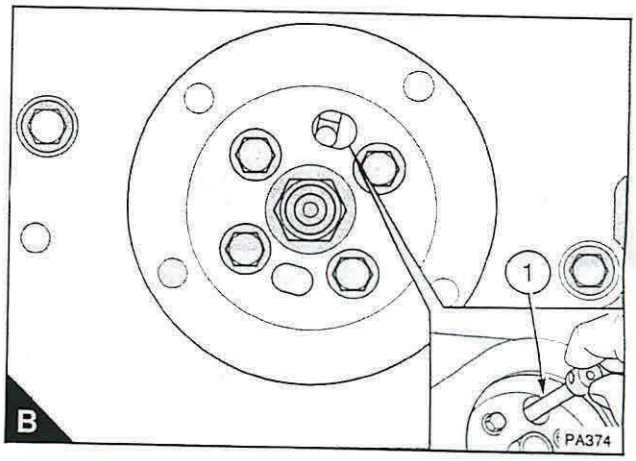

Lucas DP 200 Series fuel injection pump

To remove to fit **20A-06B**

Special tools:

Timing pin PD.246, Lucas fuel injection pumps

General description

Caution: *Do not release the nut (C2) from the fuel injection pump. Illustration (C) shows the nut in position when the fuel pump is fitted to the engine. The fuel pump hub is fitted to the shaft in the factory to ensure that the fuel pump is in the correct position for timing. If the nut is removed and the hub moves, the hub will need to be accurately fitted to the pump by use of specialist equipment before the pump can be fitted to the engine.*

The manufacturer fits the hub (A2) to the pump to ensure very accurate timing. Engines that have this arrangement have the drive gear fastened to the hub instead of to the shaft of the pump.

The hub is permanently mounted onto the drive shaft by the pump manufacturer to allow the pump timing to be set accurately when the engine is in service.

To prevent incorrect adjustments to the engine timing by rotation of the fuel pump, the mounting flange (B1) has holes instead of slots.

Accurate timing of the pump to the engine is by a pin (C1) used to align the fuel pump gear and the the hub (C4), with a hole in the body (C3) of the fuel pump. The gear is passed over the pin and fastened to the hub with four fasteners (C6).

Note: On the latest engines with belt driven coolant pumps, four tamper proof fasteners retain the fuel pump gear. Special tools to remove these fasteners are available at your Perkins distributor.

Caution: *A new fuel injection pump may be supplied with the pump shaft in the locked position. The drive shaft of the pump must not be turned without the spacer (B2) in position under the locking screw (B3).*

The fuel injection pump has a locking screw (A3) and (B3) and a spacer (B2). The locking screw prevents the rotation of the drive shaft.

An "O" ring (A1) is fitted into a groove in the pump flange. This "O" ring is fitted instead of a joint between the pump flange and the timing case.

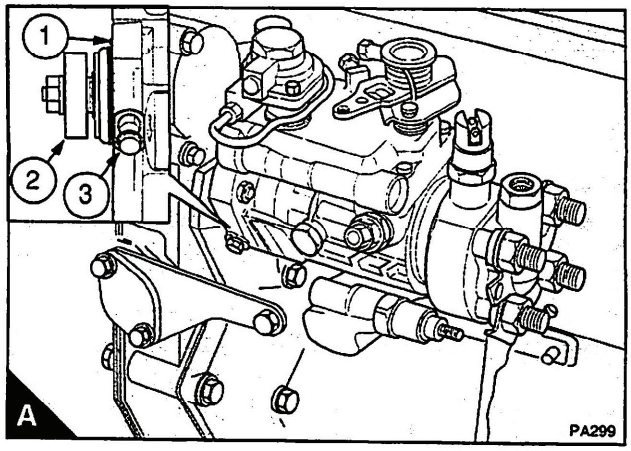

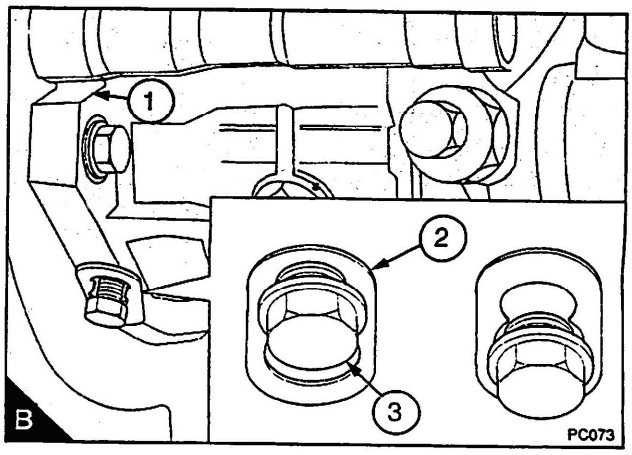

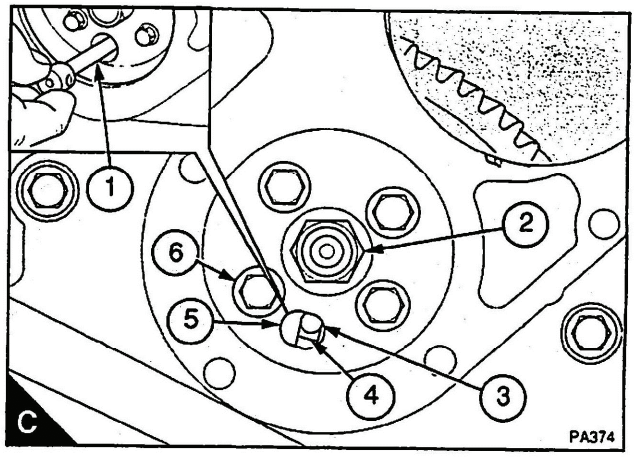

To remove

Before the crankshaft is turned or the pump is fitted, put the spacer (A1) into position under the locking screw (A2) to ensure that the **pump drive shaft is released**.

1 Disconnect the battery before the fuel injection pump is removed from the engine.

2 Set the engine to TDC on the number 1 cylinder on the compression stroke, operation 17A-01A or B.

3 Remove the gear cover from the cover of the timing case. For gear driven coolant pumps: Remove the coolant pump, operation 21A-02A.

4 Insert the timing pin (B1) through the hole (B5) in the fuel pump gear and the slot of the hub (B4). Push the pin fully into the hole (B3) in the body of the fuel pump. If the pin can be fully inserted then the pump timing is correct. There should be no resistance when the pin is inserted.

Caution: *Use a second spanner to prevent movement of the high-pressure outlet when the union nut for each high-pressure pipe is released.*

5 Remove the pipes, the cables and the connections for the cold start device and the electrical stop solenoid from the fuel pump.

Cautions:

- *Do not rotate the crankshaft when the pump is not on the engine; the loose fuel pump gear may damage the timing case. If it is necessary to rotate the crankshaft, fit the fuel pump temporarily to ensure that the gear is in the correct position. If the fuel pump is fitted temporarily in order to rotate the crankshaft,* ***the locking screw (A2) must be released*** *and a spacer (A1) fitted.*
- *Do not release the nut* (B2) *from the fuel injection pump. The fuel pump hub is fitted to the shaft in the factory to ensure that the fuel pump is in the correct position for timing. If the hub is removed, the hub will need to be accurately fitted to the pump by use of special equipment available to Perkins distributors.*

6 Remove the four fasteners (B6) and release the fuel pump gear from the hub of the fuel injection pump.

7 Remove the nuts from the flange of the fuel pump and remove the pump.

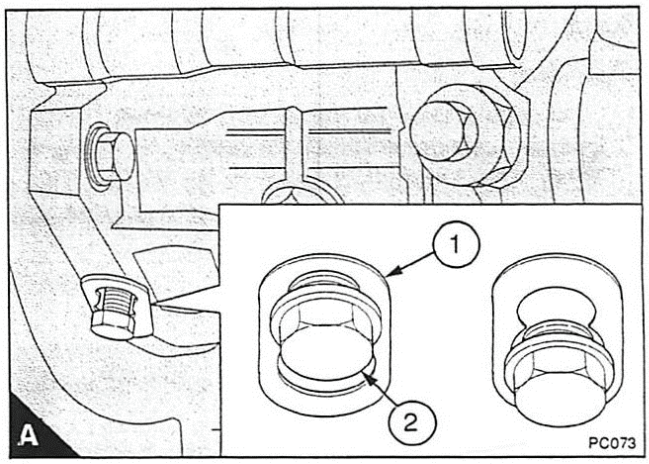

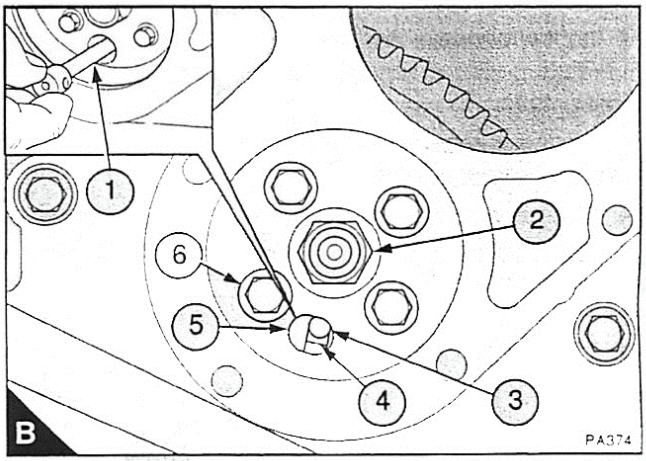

To fit

Cautions:

- *The engine must be set to TDC number 1 cylinder, compression stroke before the pump is fitted. If the crankshaft needs to be rotated, the pump must be fitted temporarily, or the loose gear could damage the timing case.*
- *The drive shaft of the pump must not be rotated without the spacer (A1) in position under the locking screw (A2). If the drive shaft is rotated with the locking screw tightened on to the shaft, the drive shaft will be damaged.*

1 Inspect the "O" ring (B1) in the pump flange and, if necessary, fit a new "O" ring.

2 Lightly lubricate the "O" ring with clean engine lubricating oil and put the pump into position on the timing case.

3 Put the fuel pump in position on the three studs and fit the flange nuts.

4 Fit the setscrew and nut of the support bracket. Ensure that force is not applied to the fuel pump when the support bracket is fitted.

5 Tighten the flange nuts of the fuel pump to 28 Nm (20 lbf ft) 2,8 kgf m.

Caution: *Do not remove the nut (C2) from the shaft of the fuel injection pump. The fuel pump hub is fitted to the shaft in the factory to ensure that the fuel pump is in the correct position for timing. If the hub is removed, the hub will need to be accurately fitted to the pump by use of special equipment available to Perkins distributors.*

6 Put the fuel pump gear onto the hub of the fuel pump. The fasteners (C6) for the fuel pump gear should be in the centre of the slots to allow for the removal of the backlash. Tighten the setscrews finger tight.

Note: The fuel pump gear will only fit in one position. The gear is fitted with the letters C and M at the front.

7 Insert the timing pin (C1) through the hole (C5) of the fuel pump gear and the slot of the hub (C4) until it can be pushed fully into the hole (C3) in the body of the fuel pump. If the timing pin cannot be pushed into the pump body, check that the engine is correctly set at TDC on the number 1 cylinder, operation 17A-01A or B.

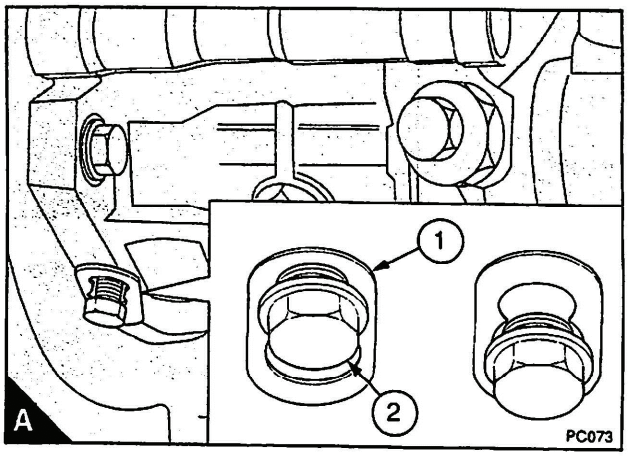

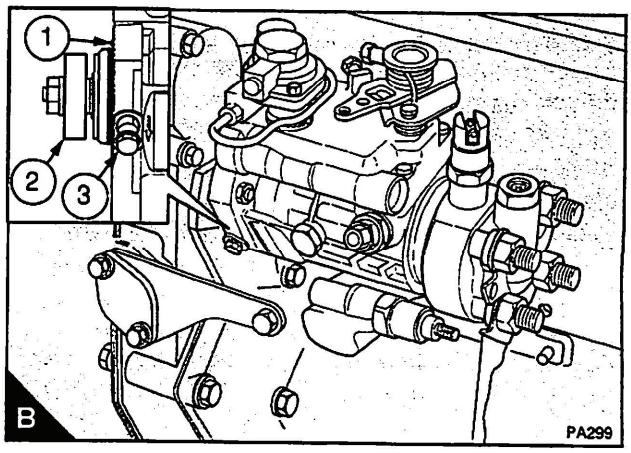

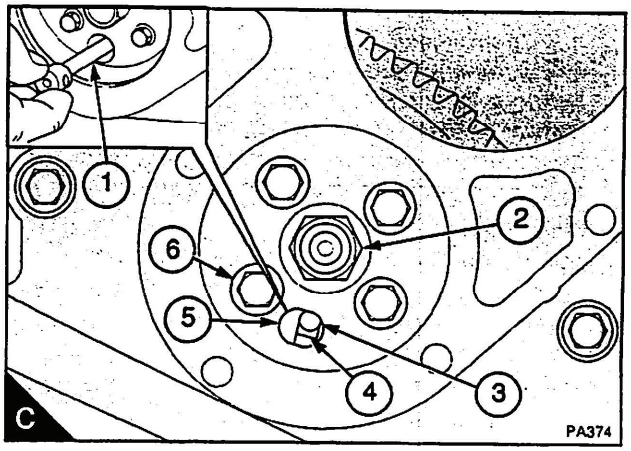

Caution: *The fuel pump gear must be fitted to the engine before the crankshaft is rotated.*

8 Carefully turn the gear counter-clockwise, by hand (A1), to remove the backlash between the idler gear and the fuel pump gear. Do not rotate the crankshaft or the fuel pump shaft. Tighten the setscrews for the fuel pump gear to 28 Nm (20 lbf ft) 2,8 kgf m.

9 Remove the timing pin.

10 Fit the gear cover to the cover of the timing case. For gear driven coolant pumps: Fit the coolant pump, operation 21A-02A.

Caution: *Do not tighten the union nuts of the high-pressure pipes more than the recommended torque tension. If there is a leakage from the union nut, ensure that the pipe is correctly aligned with the atomiser inlet. Do not tighten the atomiser union nut more, as this can cause a restriction at the end of the pipe. This can affect the fuel delivery.*

11 Fit all the pipes. Connect the control rod of the fuel injection pump. Fit the cables and connection for the cold start device and electrical stop solenoid to the pump. Ensure that a spanner is used to prevent movement of the pump outlets when the high-pressure pipes are fitted and tighten the union nuts to 22 Nm (16 lbf ft) 2,2 kgf m.

12 Eliminate air from the fuel system, operation 20A-08B.

13 Fit the cylinder head rocker cover.

14 Operate the engine and check for leakage. With the engine at the normal temperature of operation, check that the idle speed and the maximum no-load speed are correct, operation 20A-07B.

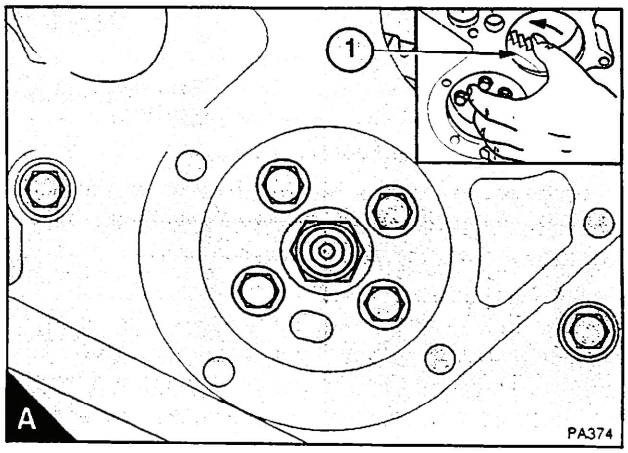

20 FUEL SYSTEM

To adjust — 20A-07B

The engine conforms with USA (EPA/CARB) stage 1 and EEC stage 1 emissions legislation for agricultural and industrial applications.

The idle or maximum speed settings must not be changed by the engine operator, because this can damage the engine or the transmission.

Specialist equipment, which is available at your Perkins Distributor, is needed to adjust the idle or maximum speed settings. The warranty of the engine can be affected if the seals on the fuel injection pump are broken during the warranty period by a person who is not approved by Perkins.

1 Operate the engine until it reaches its normal temperature of operation and check the idle speed. If necessary, adjustment can be made by the outer adjustment screw (A2). Release the lock nut and rotate the adjustment screw clockwise to increase the speed, or counter-clockwise to decrease the speed. When the speed is correct, tighten the lock nut. The setting of the idle speed can change for different applications. Normally the correct speed will be given in the manufacturer's handbook for the application. If it is not given, refer to your nearest Perkins distributor.

Caution: *The setting for the maximum no load speed can change for different applications. For the correct maximum no-load speed, check the emissions data plate fitted to the left side of the cylinder block before any adjustment is made to the maximum no load speed.*

2 With the engine at its normal temperature of operation, check the maximum no load speed. A typical maximum no load speed is 2860 rev/min. If necessary, this speed can be adjusted by the inner adjustment screw (A1). Release the lock nut and rotate the adjustment screw counter-clockwise to increase the speed or clockwise to decrease the speed. When the speed is correct, tighten the lock nut and seal the screw.

The person who fits the pump must ensure that the adjustment screw is suitably sealed against interference after it has been set initially.

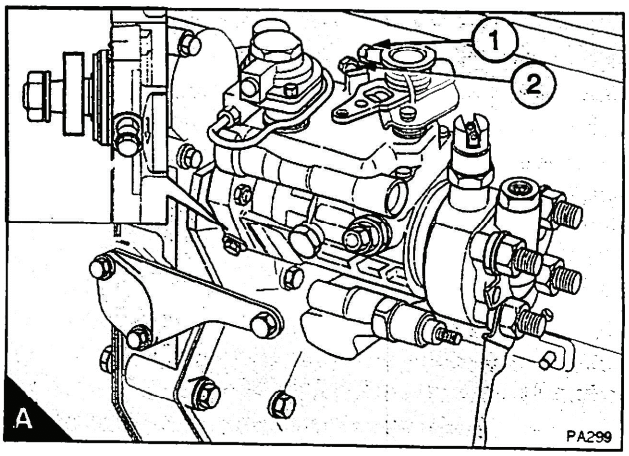

To eliminate air from the fuel system Lucas DP200 pump 20A-08B

Air will usually be removed from the fuel pump automatically when the engine is in operation. If the fuel pipes are disconnected or if the canister of the fuel filter has been renewed, or the engine runs out of fuel, it will be necessary to eliminate air from the fuel system.

Caution: *If the fuel system is empty or if the canister(s) of the fuel filter have been renewed, it will be necessary to eliminate air from the fuel system, especially the fuel injection pump.*

1 Release the vent plug on the fuel filter head (A1).

2 Operate the priming lever of the fuel lift pump (B) until fuel, free of air, comes from the vent plug. Tighten the vent plug. If the drive cam of the fuel lift pump is at the point of maximum lift, it will not be possible to operate the priming lever. In this situation, the crankshaft must be rotated one revolution.

Caution: *Use a spanner to prevent movement of the fuelled starting aid (C1) when the union nut (C2) is loosened or tightened.*

3 Loosen the union nut (C2) at the fuelled starting aid and operate the priming lever of the fuel lift pump until fuel, free of air, comes from the connection. Tighten the union nut at the starting aid.

4 Loosen the union nut at the outlet connection of the low pressure fuel leak off pipe which is on top of the governor housing of the fuel injection pump. Operate the priming lever of the fuel lift pump until fuel, free of air, comes from the connection. Tighten the union nut.

Caution: *Do not tighten the union nuts of the high-pressure pipes more than the recommended torque tension. If there is a leakage from the union nut, ensure that the pipe is correctly aligned with the atomiser inlet. Do not tighten the atomiser union nut more, as this can cause a restriction at the end of the pipe. This can affect the fuel delivery.*

5 Loosen the high-pressure connections at two of the atomisers (D1).

Continued

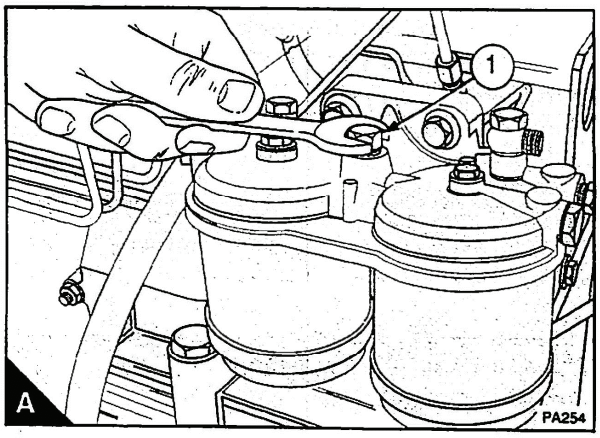

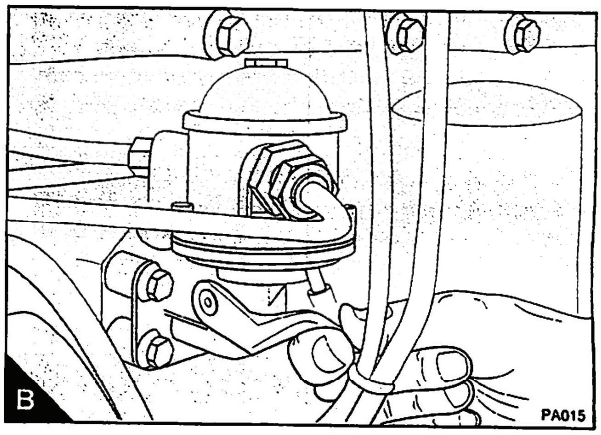

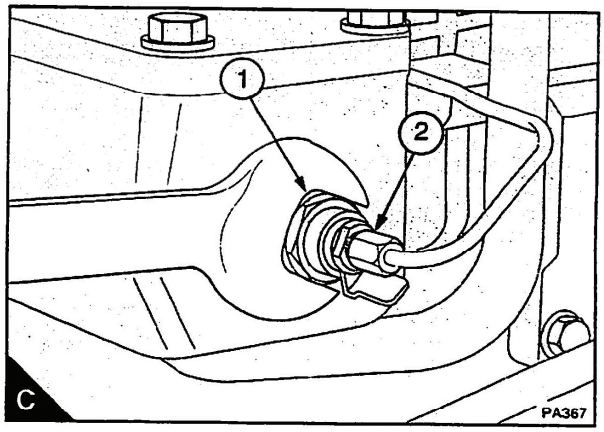

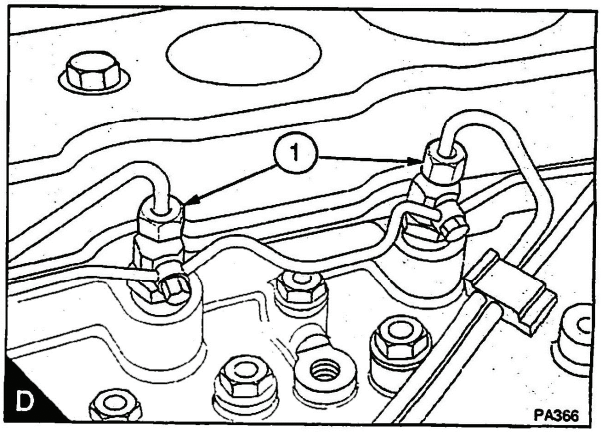

20 FUEL SYSTEM

Caution: *Damage to the fuel injection pump, battery and starter motor can occur if the starter motor is used excessively to eliminate air from the fuel system.*

6 Put the electrical system switch (user's handbook, page 3.03/A) to the "ON" position. Ensure that the manual stop control, if one is fitted, is in the "run" position. Operate the starter motor until fuel, free from air, comes from the pipe connections. Tighten the high-pressure pipe connections to 22 Nm (16 lbf ft) 2,2 kgf m. Return the switch to the "OFF" position.

7 The engine is now ready to start.

Caution: *Operate the engine at low idle speed for a minimum of five minutes immediately after air has been removed from the fuel system. This will ensure that the pump is completely free of air and prevent any damage to the pumps internal parts by metal to metal contact.*

If the engine runs correctly for a short time and then stops or runs roughly, check for air in the fuel system. If there is air in the fuel system, there is probablely a leakage in the low pressure system.